CRANE

Fluid and Thermal Management

John “Jay” Higgs, Vice President & General Manager

FLUID MANAGEMENT TODAY

CRANE

High Volume Flow | Superior Accuracy | High Reliability | Intelligent Packaging

- Lube and Scavenge Pumps
- Fuel, Water, and Coolant Pumps
- Fuel Flow Transmitters

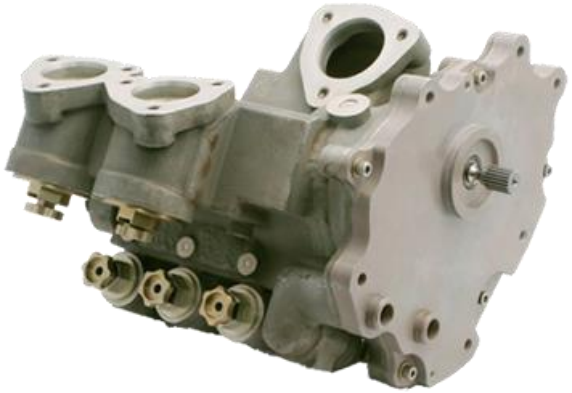







33%
market share

11%
sales CAGR
2021 - 2030

INNOVATIVE AND APPLICATION CRITICAL FLUID COMPONENTS FOR HARSH ENVIRONMENTS

BROAD CUSTOMER BASE

CRANE

- Innovative products
- Ultra high reliability
- Mission critical applications
- Harsh environments



MISSION CRITICAL HIGH RELIABILITY COMPONENTS ON NEARLY EVERY AIRCRAFT PLATFORM

DIFFERENTIATED VANE PUMP TECHNOLOGY

CRANE

- Market leader in Lube & Scavenge Pumps for turbofan engines
- Proprietary vane pump technology
- Benefits
  - High reliability and efficiency
  - Excellent flow performance at altitude
  - Lowest size and weight option

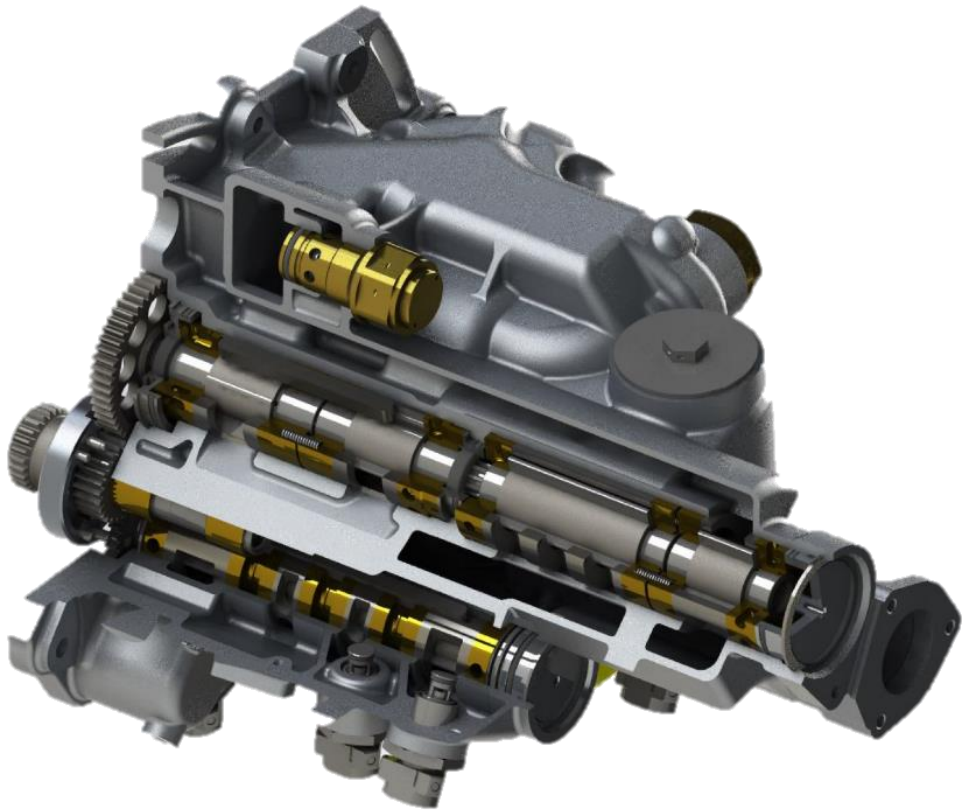

PROPRIETARY TECHNOLOGY FOR NEXT GENERATION TURBOFAN ENGINES

FUEL FLOW TRANSMITTERS

CRANE

- Market leader in high accuracy mass Fuel Flow Transmitters (FFT) for aircraft engines
- Benefits
  - Accuracy performance
  - Harsh environment compatibility
  - Form factor
- 90% market share for new installations

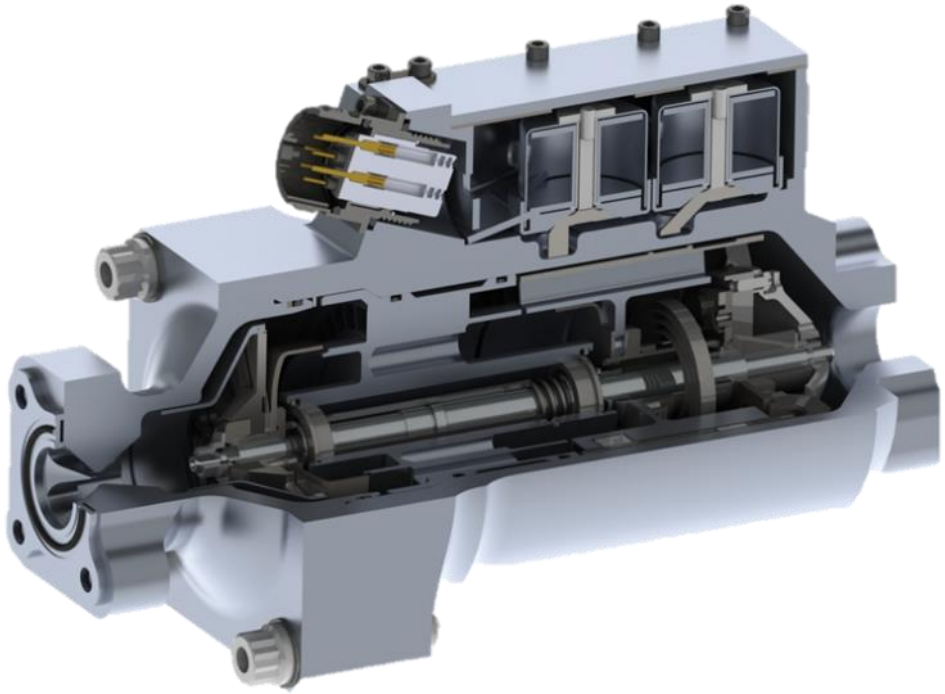

INDUSTRY STANDARD WITH BEST-IN-CLASS ACCURACY

VERTICAL INTEGRATION IS A COMPETITIVE ADVANTAGE

CRANE

- Proprietary manufacturing and test processes
- Speed and agility
- Highly optimized solutions







DIFFERENTIATED FROM COMPETITORS BY UNIQUE MANUFACTURING CAPABILITIES

TECHNOLOGY DEMONSTRATORS EXPANDING OUR MARKET

CRANE

- Unique capabilities
- Specialized requirements
- Intelligent systems
- Speed and accuracy



$130M

market share GAIN
next 10 years

10%

sales CAGR
2021 - 2030

EIGHT (8) ACTIVE OR SOON TO BE LAUNCHED TECHNOLOGY DEMONSTRATOR PROGRAMS

BREAKTHROUGH INNOVATIONS IN THERMAL MANAGEMENT

CRANE

- High density power electronics have intense cooling needs
- Traditional methods inadequate
- Liquid cooling required



ADVANCED THERMAL MANAGEMENT REQUIRED FOR “MORE ELECTRIC” WORLD

LEVERAGING CORE TECHNOLOGY

CRANE

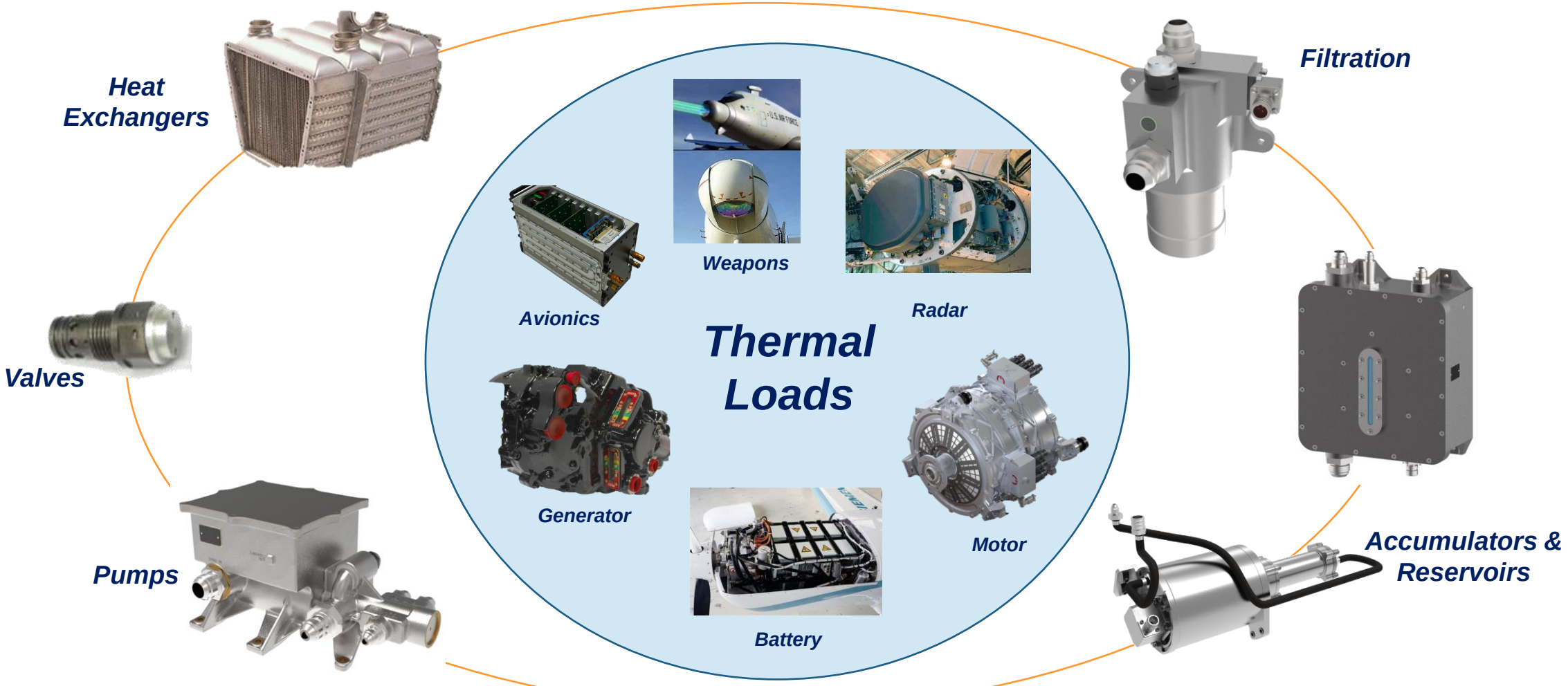

BROAD EXPERTISE TO DELIVER LIQUID COOLING SOLUTIONS SPECIFIC TO EACH APPLICATION

Copyright © 2021 Crane Aerospace & Electronics – Proprietary Information

MOTORS AND MOTOR CONTROL OPPORTUNITIES

CRANE

Brushless DC Motor Driven with Integrated Motor Controller



28 VDC – Low Power
Up to 200 W



28 VDC – High Power
Up to 600 W



270/540 VDC - Low Power
Up to 3,000 W

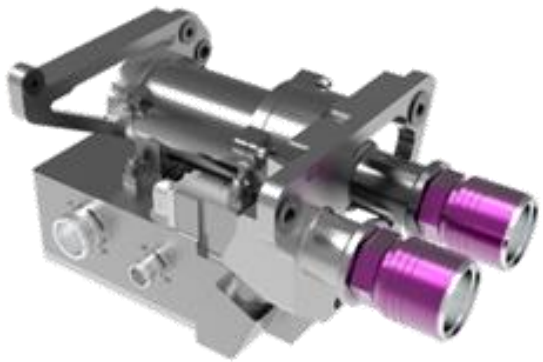

270/540 VDC – High Power
Up to 5,000 W

Low Voltage DC

High Voltage DC

A COMPLETE FAMILY OF MODULAR MOTOR-CONTROLLED PUMPS

LIQUID COOLING APPLICATIONS

CRANE

- Power generation
- Propulsion
- Radar systems
- Directed energy systems
- Defense land vehicles









LIQUID COOLING SOLUTIONS ENABLE BOTH TRADITIONAL AND DISRUPTIVE TECHNOLOGIES

SUBSTANTIAL GROWTH POTENTIAL FROM LIQUID COOLING

CRANE

- Expect 30% share of fast-growing liquid cooling market
- $300 million cumulative sales growth by 2030
- +15% sales CAGR

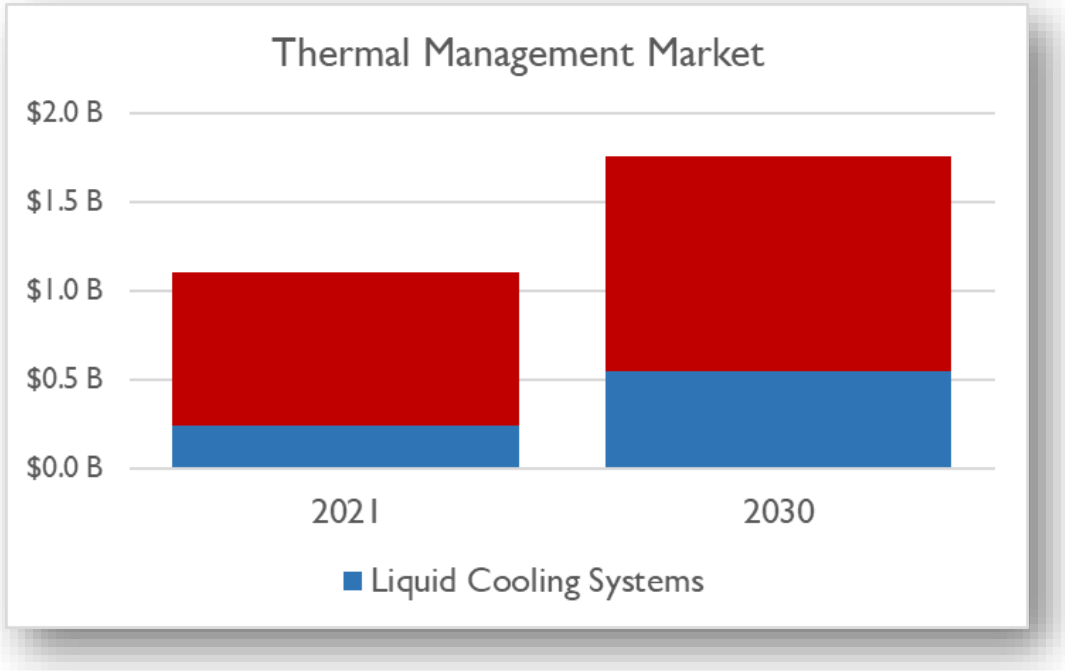

LIQUID COOLING REQUIREMENTS GROWS MUCH FASTER THAN OVERALL MARKET

POSITIONED TO DRIVE ABOVE-MARKET SALES GROWTH

CRANE

- Industry leading technology
- Unique, highly scalable products
- Certification certain pedigree
- Serving both existing and new customers
- Leading to double the rate of market growth

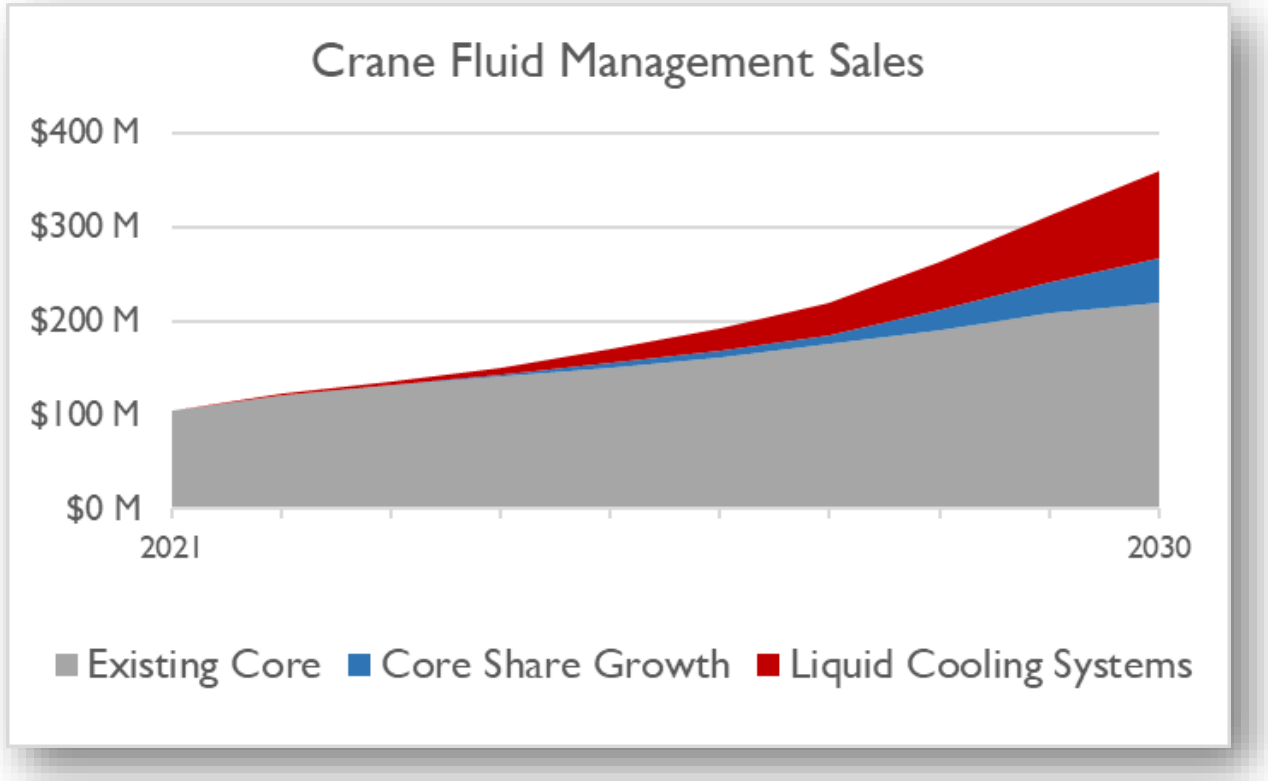

EXPECT SALES CAGR OF 11% FROM 2021 THROUGH 2030

CRANE®

AEROSPACE & ELECTRONICS

INNOVATIVE | TRUSTED | COLLABORATIVE



craneae.com