Actuation Module (ACT)

Fully Qualified Safety-Related Digital Platform

CURTISS-WRIGHT

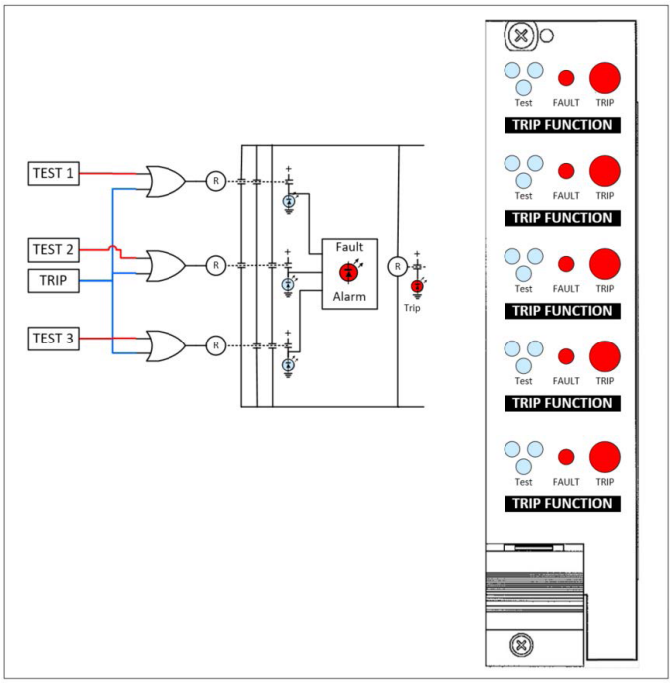

About

The radICS Platform is robust, flexible, and scalable. It delivers state-of-the-art functions, services, and safeguards for safety applications in the nuclear industry. The radICS Platform components are designed to the latest IEC standards for safety-critical service in the highest classified nuclear systems, meeting or exceeding NRC requirements. The radICS Platform consists of a Logic Module, basic input/output modules, and specialty modules all housed in a seismically qualified chassis.

The Actuation Module (ACT) serves as an adjunct device to the radICS. It is designed to actuate field devices. The two-out-of-three logic built into the module makes the device resistant to single failures that could prevent a trip or cause a spurious trip. The test features permit testing of each of the relays making up the combination logic separately while online, giving added assurance that the system will perform on demand. Up to 12 modules are housed in a single chassis, for a total of 60 channels per chassis.

Actuation Module (ACT)

- Accepts outputs from a radICS Discrete Output Module (DOM).
- High density design uses 5 channel actuation modules in a 12 slot chassis, for a total of 60 channels per 3U chassis.
- Implements sealed relays for long life.
- 2oo3 logic prevents single failures from preventing trips or causing spurious trips.
- Status of all three relays in each channel are displayed on the front panel.
- Trip status for each channel is displayed on the front panel.
- Internal fault checking circuitry alerts if one relay in the 2oo3 logic fails to actuate with the other two.
- Built in test circuitry allows testing of the individual logic relays online. A test module in each chassis allows testing of all modules in that chassis simultaneously.
- Design allows a valid trip to propagate during testing; the system is always operable.
- Health status monitored by the radICS.

radICS

CONTACT INFORMATION: 1350 Whitewater Dr., Idaho Falls, ID 83402
Tel: +1.208.497.3535 | DSS-Sales@curtisswright.com